Performance

- Suitable for wall or island applications
- Three fan speeds
- Auto function senses heat from the cooking surface and adjusts fan speeds
- Built-in 'Clean Filter' reminder light illuminates after 40 hours of operation
- Delayed shut off tackles lingering odors for up to 10 minutes
- Dishwasher-safe stainless steel baffle filters
- Filter systems are highly efficient at capturing grease
- Deep capture area allows for efficient capture of smoke and steam
- Powerfully quiet ventilation systems
- 10" duct outlet

Design

- A unique all in one box solution that includes the hood, a 1,000 CFM blower, liner, baffle filters, lights, transition, and a back-draft damper.
- Halogen lighting spotlights your best recipes
- Remote control accessory

COPYRIGHT 2013 BSH HOME APPLIANCES CORPORATION, ALL RIGHTS RESERVED

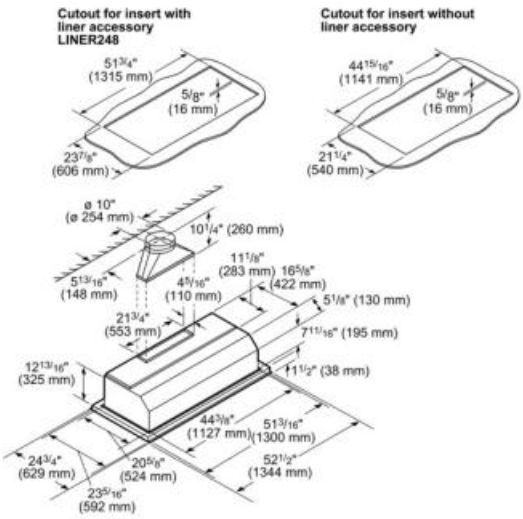

Amps (A)	15
Frequency (Hz)	60; 50-60; 50
Approval certificates	CSA
Plug type	fixed connection
Net weight (lbs)	99
Gross weight (lbs)	111
Required distance above range/rangetop/cooktop	30"/30"
Diameter of air duct (in) top	10
Diameter of air duct (in) back	10
Operating mode	Ducted
Delay shut off modes	10
Optional accessories	LINER248, VCI2REMKS
Number of lights	4
Total power of the lamps (W)	40; 40

COPYRIGHT 2013 BSH HOME APPLIANCES CORPORATION, ALL RIGHTS RESERVED