Performance

- Suitable for wall or island applications
- Three fan speeds
- Built-in 'Clean Filter' reminder light illuminates after 40 hours of operation
- Delayed shut off tackles lingering odors for up to 10 minutes
- Dishwasher safe aluminum mesh filters
- Filter systems are highly efficient at capturing grease
- Deep capture area allows for efficient capture of smoke and steam
- Powerfully quiet ventilation systems
- 10" Round duct size
- Vertical ducting direction
- Blowers sold separately
- Choose from Inline, Remote or Integrated Blowers
- Accessories include: Liner, Remote Control and Stainless Steel Baffle Filters

Design

- Stainless steel button controls
- Halogen lighting spotlights your best recipes

COPYRIGHT 2014 BSH HOME APPLIANCES CORPORATION, ALL RIGHTS RESERVED

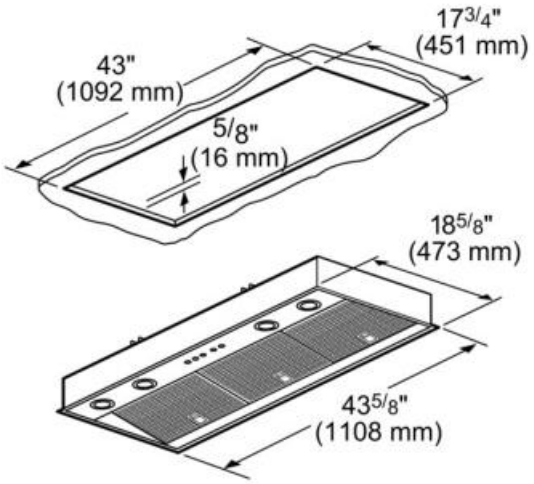

measurements in inches and mm

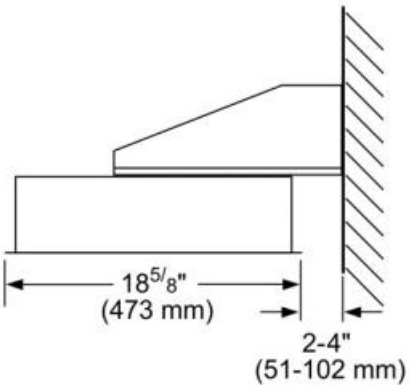

measurements in inches and mm

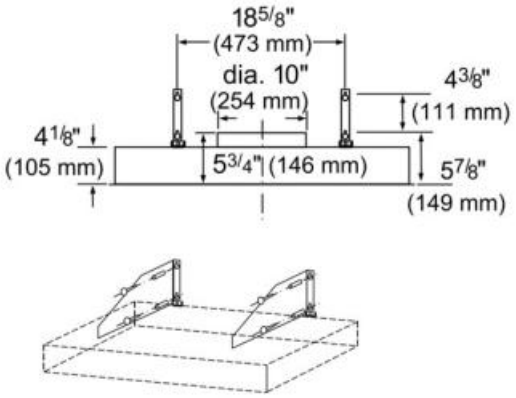

measurements in inches and mm

Frequency (Hz)	60
Approval certificates	ETL, UL
Plug type	120V-3 prong
Net weight (lbs)	32
Gross weight (lbs)	35
Required distance above range/rangetop/cooktop	30"/30"
Motor location	without motor
Operating mode	Ducted
Delay shut off modes	10
Optional accessories	BAFFLT48, EXTNCB25, LINER48, RFPLT1000, RFPLT600, VCI2REMFS
Number of lights	4
Type of lamps used	Halogen
Total power of the lamps (W)	80
Grease filter material	Washable synthetic
Grease filter type	Multilayer cassette

COPYRIGHT 2014 BSH HOME APPLIANCES CORPORATION, ALL RIGHTS RESERVED