Design

- FREEDOM® Hinge enables true flush design
- Full height door - True cabinet integration without exposed venting grille
- ALL LED sidewall and theater lighting
- Flat stainless steel door panels, pre-assembled
- Masterpiece handles, pre-assembled
- FrameKit for flush installations (25" deep cut-outs) or framed installations (24" deep cut-outs) , pre-assembled
- Reversible Door Swing

Performance

- Dual compressor and dual evaporator
- Electronic controls for precise temperature management
- Full Width Meat Drawer
- Carbon air filter reduces odors and keeps air clean and fresh
- Full length cantilever racks for ultimate adjustability
- Full width glass shelves with metal trim
- Full extension drawers at 90° door opening angle
- Gallon door bins
- Large capacity freezer drawer
- Filtered ice-maker
- SuperCool - Chills food quickly
- SuperFreeze - Freezes food quickly
- Sabbath mode
- Economy mode
- Vacation mode
- Door open alarm
- ENERGY STAR® Qualified
- 19.8 Cu. Ft.

COPYRIGHT 2014 BSH HOME APPLIANCES CORPORATION, ALL RIGHTS RESERVED

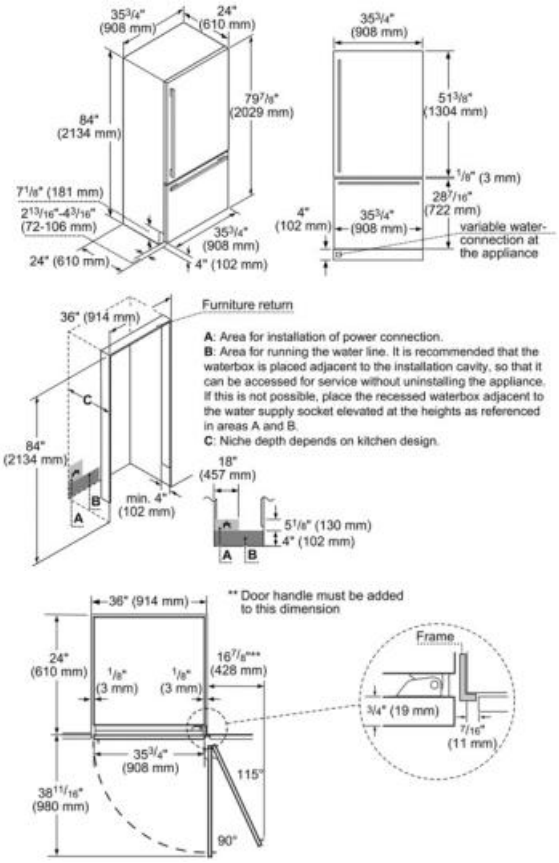

Amps (A)	15
Frequency (Hz)	60
Approval certificates	ETL, ETL C
Net weight (lbs)	528
Gross weight (lbs)	573
Refrigerator gross capacity (cu.ft.)	14
Freezer gross capacity (cu.ft.)	6
Humidity control drawers	Yes
Number of door bins - refrigerator	2
Reversible door hinge	Yes

COPYRIGHT 2014 BSH HOME APPLIANCES CORPORATION, ALL RIGHTS RESERVED