INNOVATION

- Most powerful 30" cooktop in the luxury segment (amongst leading manufacturers) with an overall output of 52,000 BTU
- Patented and exclusive Star® Burner provides superior performance

PERFORMANCE

- 30" - 5 burner gas cooktop provides functionality of a 36" cooktop in a compact kitchen environment
- Powerful 16,000 BTU Center Burner
- Continuous grates allow pots and pans to glide smoothly across the cooktop
- Automatic electronic re-ignition
- Knobs feature a safety "push to turn" system

DESIGN

- Chiseled, angular design coordinates with the suite of Thermador Masterpiece™ Collection appliances
- High-grade, quality die cast metal knobs

COPYRIGHT 2014 BSH HOME APPLIANCES CORPORATION, ALL RIGHTS RESERVED

30 inch Masterpiece® Series Gas Cooktop SGS305FS

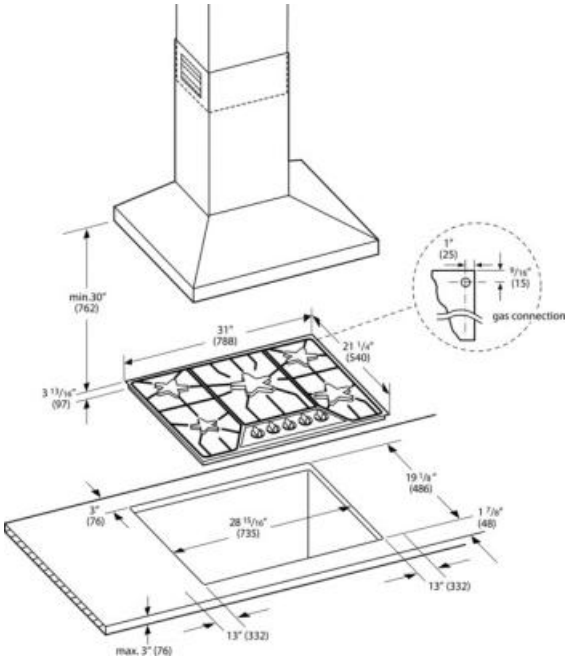

Gas type	Natural gas 15 mbar (USA)
Alternative gas type	Liquid gas 27,5 mbar (USA)
Amps (A)	15
Frequency (Hz)	60
Approval certificates	CSA
Plug type	120V-3 prong
Minimum distance from counter front (in)	1 7/8"
Minimum distance from rear wall (in)	3"
Net weight (lbs)	36
Knob material	Full metal
Sealed burners	Yes
Type of grate	Cast iron
Number of single grates	1
Number of double grates	2
LP Gas Connection Rating (BTU)	45200
Location of 1st heating element	front left
Power of 1st burner (BTU)	8000
Location of 2nd heating element	back left
Power of 2nd burner (BTU)	10000
Location of 3rd heating element	front centre/cent
Included accessories	3 x cast iron pan support
Power of 3rd burner (BTU)	16000
Optional accessories	SGRIDDLEF, SNLPKITF, SWOKRINGF
Location of 4th heating element	back right
Power of 4th burner (BTU)	8000
Location of 5th heating element	front right
Power of 5th burner (BTU)	10000

COPYRIGHT 2014 BSH HOME APPLIANCES CORPORATION, ALL RIGHTS RESERVED