36 inch Professional Series Pro Harmony Standard Depth LP Range PRL366GH

INNOVATION

- Exclusive, patented Star® Burner – most even heating, unsurpassed flame coverage
- Precision simmering capabilities as low as 100°F (375 BTU) with 2 ExtraLow® Simmer burners
- QuickClean Base™ designed for easy surface cleaning

PERFORMANCE

- Professional style, continuous cast iron grates
- Continuous porcelain, easy to clean cooking surface
- Every burner 15,000 BTU (LP)
- Widest range of simmer options from 375 BTU to 3,000 BTU
- Star® design delivers superior heat spread for any size pan
- Simmer without stirring/scorching with exclusive ExtraLow®
- Powerful, 25,000 BTU bake and 19,000 BTU broil burners
- Convection Bake offers precise multi-level baking results
- Massive oven capacity of 5 cu.ft.
- Six rack levels for multiple item cooking
- Full Access® telescopic racks, integrated easy-grip handle
- Electronic oven control ensures precise heating
- Large oven door window for maximum viewing
- Powerful halogen lighting illuminates the oven cavity
- Sabbath mode

DESIGN

- Bold Professional design
- Truly Flush Mounted™, 24" standard cabinet depth
- Patented Pedestal Star® Burner with QuickClean Base™

COPYRIGHT 2014 BSH HOME APPLIANCES CORPORATION, ALL RIGHTS RESERVED

- Restaurant style metal knobs
- Signature blue indicator lighting
- 36" units ship standard with island trim included

COPYRIGHT 2014 BSH HOME APPLIANCES CORPORATION, ALL RIGHTS RESERVED

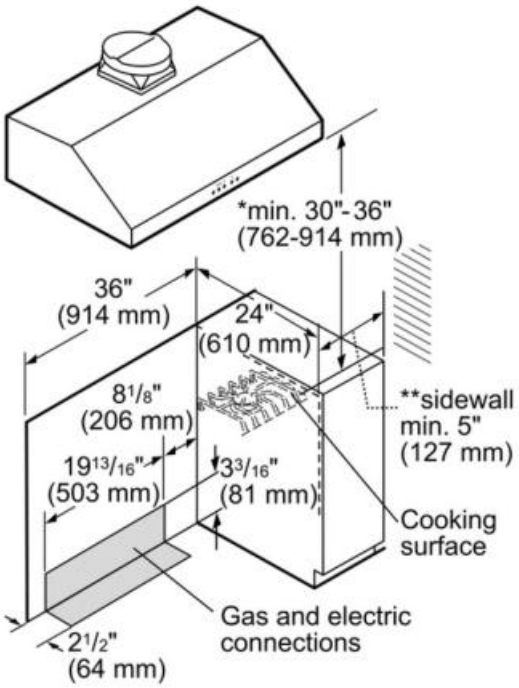

* 30" (762 mm) minimum clearance above cooking surface to non-combustible surface. Minimum clearance above cooking surface to combustible surface is 36" (914 mm).

** 5" (127 mm) minimum clearance from sides of the range, above the cooking surface, to combustible side walls.

Note: Most hoods contain combustible components that must be considered when planning the installation.

measurements in inches

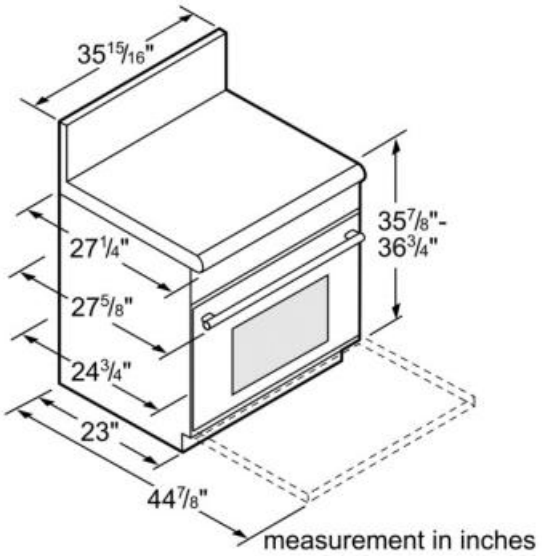

Amps (A)	15
Frequency (Hz)	60
Gas type	Liquid gas 27,5 mbar (USA)
Approval certificates	CSA
Plug type	120V-3 prong
Net weight (lbs)	378
Gross weight (lbs)	419
Type of grate	Cast iron
Number of double grates	3
Knob material	Full metal
Included accessories	1 x island trim, 1 x Broiler pan
Location of 1st heating element	front left
Power of 1st burner (BTU)	15000
Power of 1st heating element (W)	4.39
Location of 2nd heating element	back left
Power of 2nd burner (BTU)	15000
Power of 2nd heating element (W)	4.39
Location of 3rd heating element	middle back
Power of 3rd burner (BTU)	15000
Power of 3rd heating element (W)	4.39
Location of 4th heating element	back right
Power of 4th burner (BTU)	15000
Power of 4th heating element (W)	4.39
Location of 5th heating element	front right
Power of 5th burner (BTU)	15000
Power of 5th heating element (W)	4.39
Location of 6th heating element	front middle / central
Power of 6th burner (BTU)	15000
Power of 6th heating element (W)	4.39

COPYRIGHT 2014 BSH HOME APPLIANCES CORPORATION, ALL RIGHTS RESERVED