48 inch Professional Series Pro Grand Commercial Depth Dual Fuel Steam Range PRD48JDSGU

INNOVATION

- The only range in the market with a steam and convection combination oven, plus a full-size convection oven and a warming drawer
- 27 Easy Cook® food programs. Pre-programmed modes automatically set the oven temperature and humidity to ensure perfect cooking results
- Patented Pedestal Star® Burner with QuickClean Base® designed for easy surface cleaning and superior heat spread for any size pan
- Powerful 22,000 BTU (NG) burner (front right)
- Precision simmering capabilities as low as 100°F (375 BTU) with 4 ExtraLow® Simmer burners
- SoftClose® hinges for ultra smooth closing of both ovens and the warming drawer.
- Glass surface warming drawer

PERFORMANCE

- 18,000 BTU (NG) Star® Burners
- Titanium surface non-stick, rust-proof cast-aluminum griddle and grill, removable for easy clean-up
- 1.4 cu.ft. steam cavity easily accommodates a 14lb. Turkey
- Steam oven features 9 advanced conventional cooking modes
- Steam cavity is non-plumbed, for easy installation into any home
- Steam Clean function helps keep the steam oven spotless
- Electronic oven display interfaces to cook timer, CookControl™ meat probe and preheat status with audible alert
- Third Element Convection offers precise airflow for cooking on multiple levels without flavor transfer
- Powerful, 4000 Watt 8-pass broil elements in large oven

COPYRIGHT 2016 BSH HOME APPLIANCES CORPORATION, ALL RIGHTS RESERVED

- Full Access® telescopic racks, integrated easy-grip handle
- Spacious 1.1 cu. ft. warming drawer holds up to ten 11" dinner plates
- Drawer has open sides for easy and convenient access
- Star-K Kosher certified

DESIGN

- Distinctive three door design showcases Thermador's self-assured bold and elegant design
- Pinhole and panel lighting concepts provide functional and stylish aesthetics
- Professional style, continuous cast iron grates
- Continuous porcelain, easy to clean cooking surface
- Hidden bake element makes clean-up one smooth surface
- Large oven door window for maximum viewing

COPYRIGHT 2016 BSH HOME APPLIANCES CORPORATION, ALL RIGHTS RESERVED

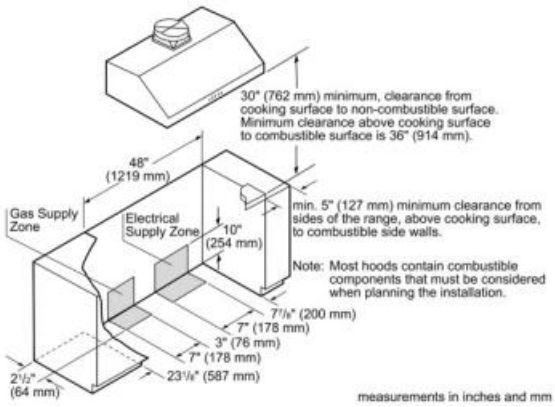

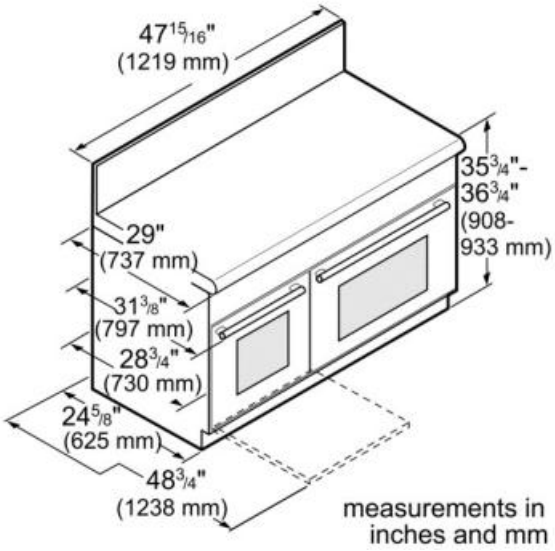

Amps (A)	50
Frequency (Hz)	60
Gas type	Natural gas 15 mbar (USA)
Approval certificates	CSA
Time control	No
Location of 1st heating element	front left
Power of 1st heating element (W)	5.27
Included accessories	1 x nozzle set for liquid gas, 1 x island trim, 1 x grill plate, 1 x Broiler pan, 1 x broiler pan small, 1 x grid, 3 x telescopic rack, 2 x temperature sensor, 1 x STS tray-GN2/3-unpunched-28 mm deep, 1 x STS tray-GN1/3-punched-40 mm deep, 1 x STS tray-GN2/3-punched-40 mm deep, 1 x STS tray-GN2/3-unpunched-40 mm deep, 1 x STS tray-GN1/3-unpunched-40 mm deep
Power of 1st heating element (W)	5.27
Location of 2nd heating element	back left
Power of 2nd heating element (W)	5.27
Location of 3rd heating element	middle back
Power of 3rd heating element (W)	5.27
Location of 6th heating element	rear first right
Power of 6th heating element (W)	5.27

COPYRIGHT 2016 BSH HOME APPLIANCES CORPORATION, ALL RIGHTS RESERVED