48 inch Professional Series Pro Harmony Standard Depth Dual Fuel Range PRD486GDHU

INNOVATION

- Exclusive, patented Star® Burner – most even heating, unsurpassed flame coverage
- QuickClean Base™ designed for easy surface cleaning
- Precision simmering capabilities as low as 100°F (375 BTU) with 2 ExtraLow® Simmer burners
- Cleans both ovens simultaneously in just 2 hours

PERFORMANCE

- Professional style, continuous cast iron grates
- Continuous porcelain, easy to clean cooking surface
- Widest range of simmer options from 375 BTU to 3,000 BTU
- Every burner 18,000 BTU (NG)
- Star® design delivers superior heat spread for any size pan
- Simmer without stirring/scorching with exclusive ExtraLow®
- Superior griddle results-6 pass, 1630 watt electric griddle
- Titanium surface non-stick, rust-proof cast-aluminum griddle
- Grill accessory-thermostatically controlled for even heating
- Titanium surface non-stick, rust-proof cast-aluminum grill accessory
- Removable griddle and grill accessory for easy clean-up
- Powerful, 8-pass bake and broil elements
- Powerful, 6-pass bake and broil elements in small oven
- Third Element Convection offers precise airflow for cooking on multiple levels without flavor transfer
- Massive oven capacity of 4.4 cu.ft. plus 2.2 cu.ft. in small oven

COPYRIGHT 2014 BSH HOME APPLIANCES CORPORATION, ALL RIGHTS RESERVED

- Six rack levels for multiple item cooking
- Full Access® telescopic racks, integrated easy-grip handle
- Electronic oven control ensures precise heating
- Large oven door window for maximum viewing
- Powerful halogen lighting illuminates the oven cavity
- Sabbath mode

DESIGN

- Bold Professional design
- Truly Flush Mounted™, 24" standard cabinet depth
- Patented Pedestal Star® Burner with QuickClean Base™
- Restaurant style metal knobs
- Signature blue indicator lighting
- 48" units ship standard with island trim included

COPYRIGHT 2014 BSH HOME APPLIANCES CORPORATION, ALL RIGHTS RESERVED

48 inch Professional Series Pro Harmony Standard Depth Dual Fuel Range PRD486GDHU

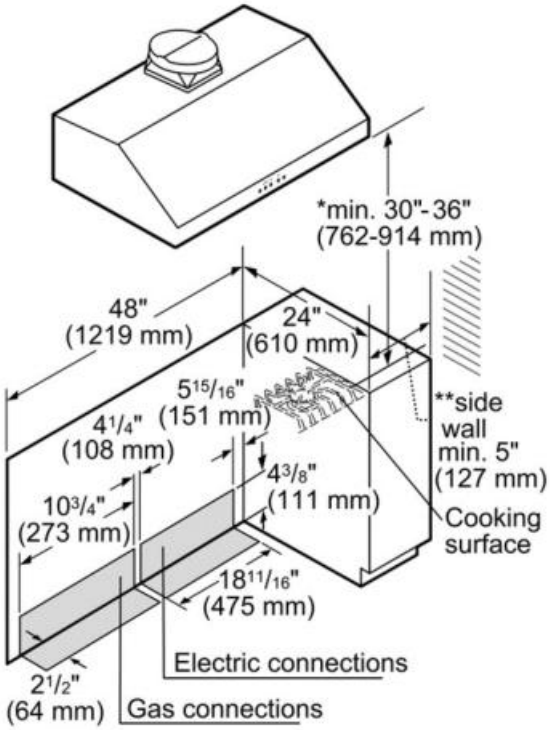

* 30" (762 mm) minimum clearance above cooking surface to non-combustible surface. Minimum clearance above cooking surface to combustible surface is 36" (914 mm).

** 5" (127 mm) minimum clearance from sides of the cooker, above the cooking surface, to combustible side walls.

Note: Most hoods contain combustible components that must be considered when planning the installation.

measurements in inches

Amps (A)	50
Frequency (Hz)	60
Gas type	Natural gas 15 mbar (USA)
Alternative gas type	Liquid gas 27,5 mbar (USA)
Approval certificates	CSA, CUL
Plug type	240V-4 prong
Net weight (lbs)	505
Gross weight (lbs)	560
Type of grate	Cast iron
Number of double grates	3
Knob material	Full metal
Included accessories	1 x island trim, 1 x Broiler pan small, 1 x Broiler pan
Power of griddle element	1630
Optional accessories	PA12CHPBLK, PA12GCVRHC, PA12GRILHC, PA18GTRH, PA30GTRH, PA48GHSH, PA48GLBH, PAGRIDDLE, PAKNOBLK, PAKNOBLU, PALPKITHC, PC24CHPBLK, PWOKRINGHC
Location of 1st heating element	front left
Power of 1st burner (BTU)	18000
Power of 1st heating element (W)	5.27
Location of 2nd heating element	back left
Power of 2nd burner (BTU)	18000
Power of 2nd heating element (W)	5.27
Location of 4th heating element	back right
Power of 4th burner (BTU)	18000
Power of 4th heating element (W)	5.27
Location of 5th heating element	front right
Power of 5th burner (BTU)	18000
Power of 5th heating element (W)	5.27

COPYRIGHT 2014 BSH HOME APPLIANCES CORPORATION, ALL RIGHTS RESERVED

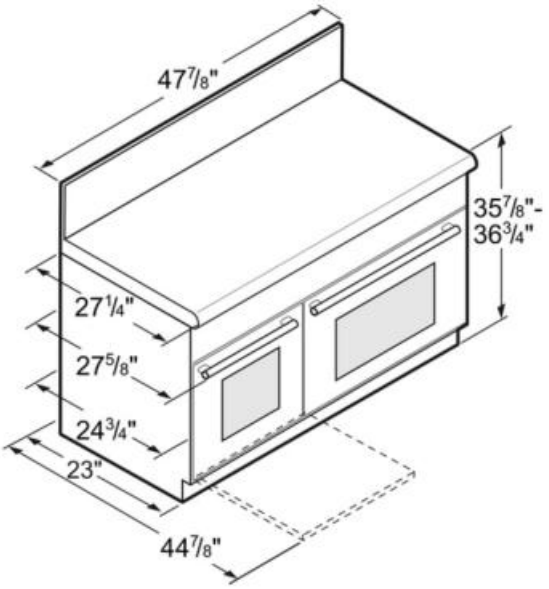

measurement in inches

COPYRIGHT 2014 BSH HOME APPLIANCES CORPORATION, ALL RIGHTS RESERVED