30 inch Professional Series Pro Harmony Standard Depth Dual Fuel Range PRD304GHU

INNOVATION

- Exclusive, patented Star® Burner – most even heating, unsurpassed flame coverage
- QuickClean Base® designed for easy surface cleaning
- Precision simmering capabilities as low as 100°F (375 BTU) with 2 ExtraLow® Simmer burners
- Superfast 2-hour self-clean mode - fastest in the industry

PERFORMANCE

- Professional style, continuous cast iron grates
- Continuous porcelain, easy to clean cooking surface
- Every burner 18,000 BTU (NG)
- Widest range of simmer options from 375 BTU to 3,000 BTU
- Star® design delivers superior heat spread for any size pan
- Simmer without stirring/scorching with exclusive ExtraLow®
- Powerful, 8-pass bake and broil elements
- Third Element Convection offers precise airflow for cooking on multiple levels without flavor transfer
- Massive oven capacity of 4.4 cu.ft.
- Six rack levels for multiple item cooking
- One Full Access® telescopic rack and two standard racks, all with integrated easy-grip handle
- Electronic oven control ensures precise heating
- Large oven door window for maximum viewing
- Powerful halogen lighting illuminates the oven cavity
- Sabbath mode

DESIGN

- Bold Professional design
- Truly Flush Mounted™, 24" standard cabinet depth
- Patented Pedestal Star® Burner with QuickClean

COPYRIGHT 2013 BSH HOME APPLIANCES CORPORATION, ALL RIGHTS RESERVED

Base™

- Restaurant style metal knobs
- Signature blue indicator lighting
- 30" units ship standard with island trim included

COPYRIGHT 2013 BSH HOME APPLIANCES CORPORATION, ALL RIGHTS RESERVED

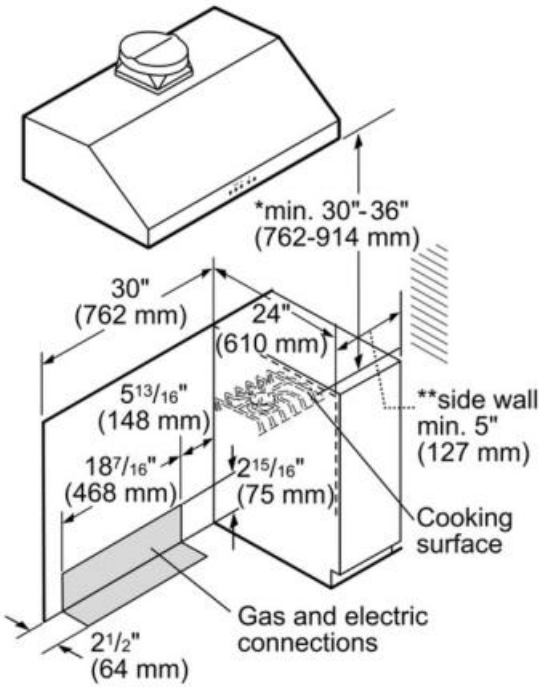

* 30" (762 mm) minimum clearance above cooking surface to non-combustible surface. Minimum clearance above cooking surface to combustible surface is 36" (914 mm).

** 5" (127 mm) minimum clearance from sides of the cooker, above the cooking surface, to combustible side walls.

Note: Most hoods contain combustible components that must be considered when planning the installation.

measurements in inches

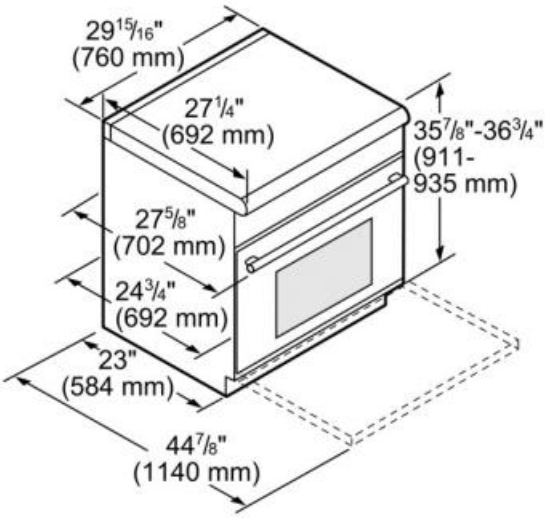

measurement in inches

Amps (A)	35
Frequency (Hz)	60
Gas type	Natural gas 15 mbar (USA)
Alternative gas type	Liquid gas 27,5 mbar (USA)
Approval certificates	CSA
Plug type	No plug
Net weight (lbs)	297
Gross weight (lbs)	329
Type of grate	Cast iron
Number of double grates	3
Knob material	Full metal
Included accessories	1 x island trim, 1 x Broiler pan
Optional accessories	PA12CHPBLK, PA30GHSH, PA30GITH, PA30GTRH, PAGRIDDLE, PAKNOBLK, PAKNOBLU, PALPKITHC, PC24CHPBLK, PWOKRINGHC
Location of 1st heating element	front left
Power of 1st burner (BTU)	18000
Power of 1st heating element (W)	5.27
Location of 2nd heating element	back left
Power of 2nd burner (BTU)	18000
Power of 2nd heating element (W)	5.27
Location of 4th heating element	back right
Power of 4th burner (BTU)	18000
Power of 4th heating element (W)	5.27
Location of 5th heating element	front right
Power of 5th burner (BTU)	18000
Power of 5th heating element (W)	5.27

COPYRIGHT 2013 BSH HOME APPLIANCES CORPORATION, ALL RIGHTS RESERVED

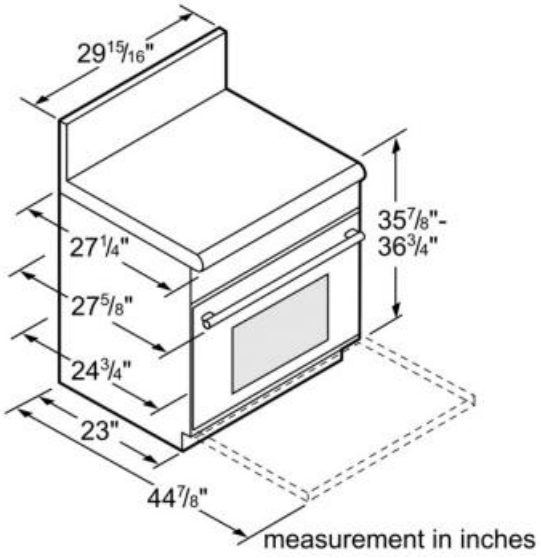

COPYRIGHT 2013 BSH HOME APPLIANCES CORPORATION, ALL RIGHTS RESERVED