**Performance**

- 600 CFM Integrated Blower included
- An ideal solution for island cooktop installations
- Four fan speeds including one intensive level
- Built-in 'Clean Filter' reminder light illuminates after 40 hours of operation
- Delayed shut off tackles lingering odors for up to 10 minutes
- Dimmer lighting – for a soft lighting effect completely adjustable by user
- Dishwasher safe stainless steel mesh filters
- Filter systems are highly efficient at capturing grease
- Easy to operate control buttons
- Powerfully quiet ventilation systems
- Perfect fit for 30” & 36” cooktops
- 6" Round duct size
- Vertical ducting direction

**Design**

- Stunning combination of glass and stainless steel with Masterpiece® design elements
- Chiseled design for a seamless integration into any kitchen
- Halogen lighting spotlights your best recipes
- Brushed stainless steel finish
- Premium electronic touch controls


COPYRIGHT 2014 BSH HOME APPLIANCES CORPORATION, ALL RIGHTS RESERVED

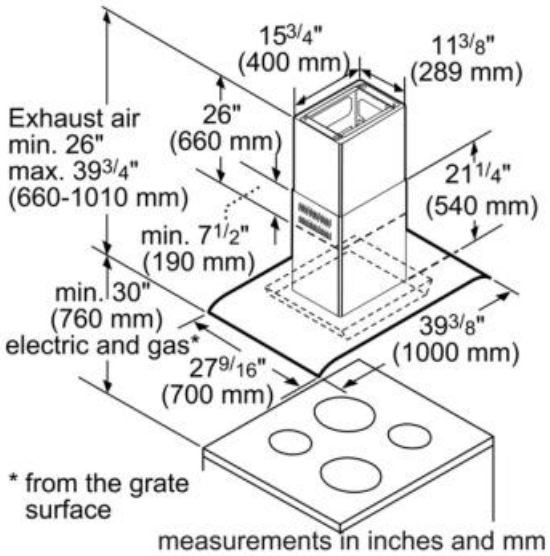


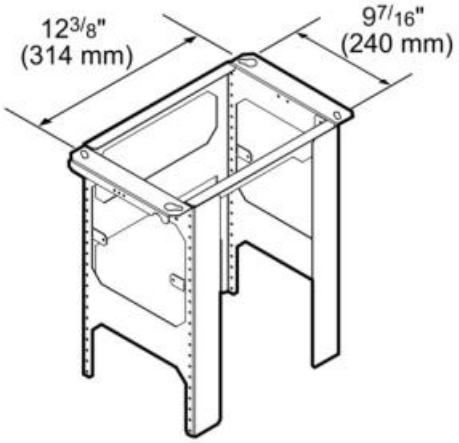


measurements in inches and mm

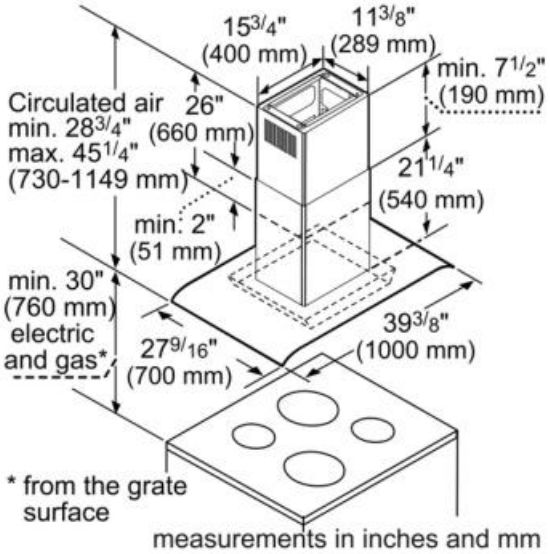


| | |
|---|---|
| Amps (A) | 5 |
| Frequency (Hz) | 60 |
| Approval certificates | ETL |
| Plug type | 120V-3 prong |
| Height of the chimney (in) | 28 3/8" - 39 7/16" |
| Net weight (lbs) | 87 |
| Gross weight (lbs) | 108 |
| Required distance above range/rangetop/cooktop | 30"/30" |
| Motor location | Integrated motor in hood chimney |
| Diameter of air duct (in) top | 6 |
| Operating mode | Convertable: Ducted / Recirculating |
| Delay shut off modes | 10 |
| Optional accessories | CHFILISL, RECIRISL |
| Number of lights | 4 |
| Type of lamps used | Halogen |
| Total power of the lamps (W) | 80 |
| Grease filter material | Washable synthetic |
| Grease filter type | Multilayer cassette |


COPYRIGHT 2014 BSH HOME APPLIANCES CORPORATION, ALL RIGHTS RESERVED