Performance

- 600 CFM Integrated Blower included
- An ideal solution for island cooktop installations
- Four fan speeds including one intensive level
- Built-in 'Clean Filter' reminder light illuminates after 40 hours of operation
- Delayed shut off tackles lingering odors for up to 10 minutes
- Dimmer lighting – for a soft lighting effect completely adjustable by user
- Dishwasher safe stainless steel mesh filters
- Filter systems are highly efficient at capturing grease
- Easy to operate control buttons
- Powerfully quiet ventilation systems
- Perfect fit for 30” & 36” cooktops
- 6" Round duct size
- Vertical ducting direction

Design

- Stunning combination of glass and stainless steel with Masterpiece® design elements
- Chiseled design for a seamless integration into any kitchen
- Halogen lighting spotlights your best recipes
- Brushed stainless steel finish
- Premium electronic touch controls

COPYRIGHT 2014 BSH HOME APPLIANCES CORPORATION, ALL RIGHTS RESERVED

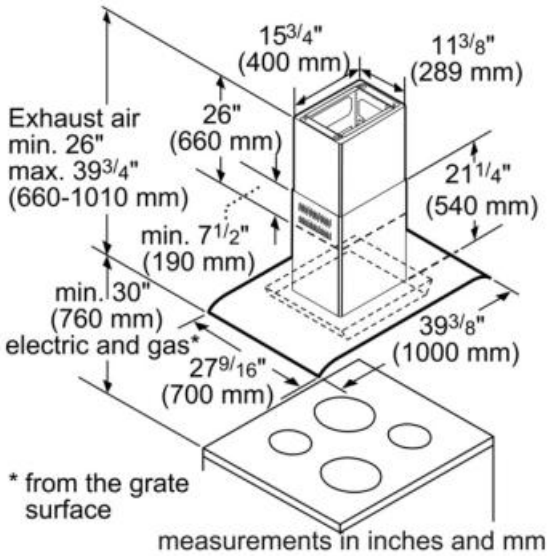

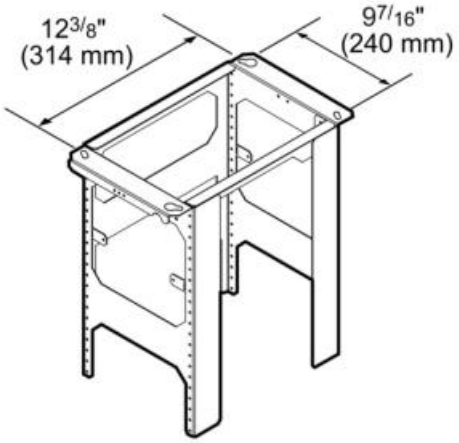

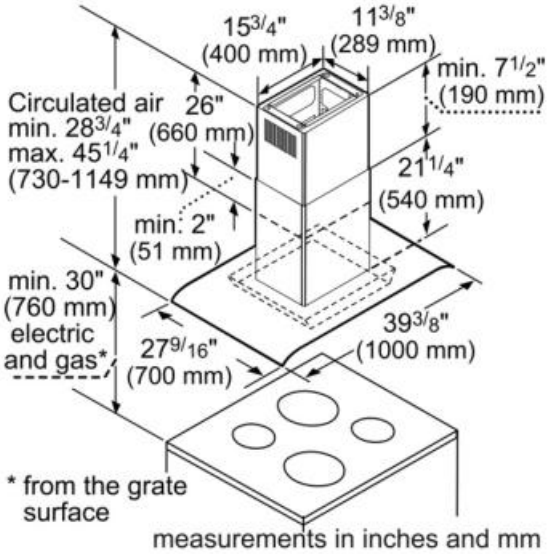

Amps (A)	5
Frequency (Hz)	60
Approval certificates	ETL
Plug type	120V-3 prong
Height of the chimney (in)	28 3/8" - 39 7/16"
Net weight (lbs)	87
Gross weight (lbs)	108
Required distance above range/rangetop/cooktop	30"/30"
Motor location	Integrated motor in hood chimney
Diameter of air duct (in) top	6
Operating mode	Convertable: Ducted / Recirculating
Delay shut off modes	10
Optional accessories	CHFILISL, RECIRISL
Number of lights	4
Type of lamps used	Halogen
Total power of the lamps (W)	80
Grease filter material	Washable synthetic
Grease filter type	Multilayer cassette

COPYRIGHT 2014 BSH HOME APPLIANCES CORPORATION, ALL RIGHTS RESERVED