42 inch Masterpiece Series Pyramidal Style Chimney Wall Hood HMCN42FS

Performance

- Three fan speeds plus 10 minute high-power operation mode
- Built-in 'Clean Filter' reminder light illuminates after 40 hours of operation
- Delayed shut off tackles lingering odors for up to 10 minutes
- Dimmer lighting - for those hours after a late meal
- Dishwasher safe stainless-frame mesh filters
- Filter systems are highly efficient at capturing grease
- Powerfully quiet ventilation systems
- 8" Round duct size
- Vertical ducting direction
- Blowers sold separately
- Choose from Inline, Remote or Integrated Blowers
- Telescopic chimney - adjustable at installation

Design

- Brushed stainless steel finish
- Welded, polished seams for a flawless design
- Premium electronic touch controls
- Halogen lighting spotlights your best recipes

COPYRIGHT 2013 BSH HOME APPLIANCES CORPORATION, ALL RIGHTS RESERVED

42 inch Masterpiece Series Pyramidal Style Chimney Wall Hood HMCN42FS

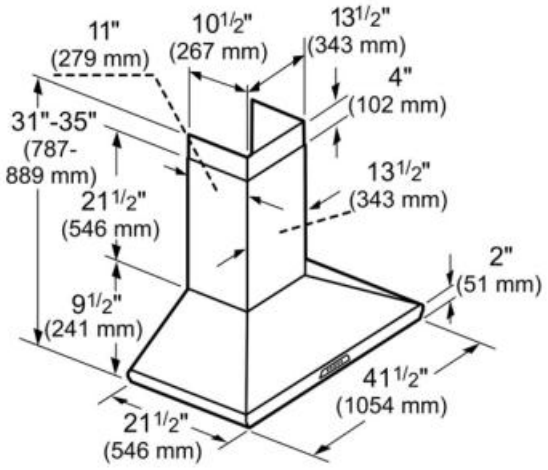

measurements in inches and mm

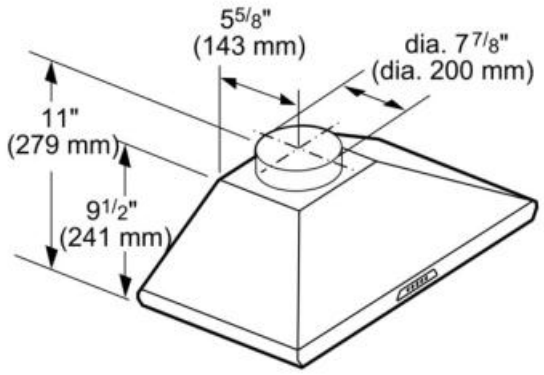

measurements in inches and mm

Frequency (Hz)	60
Approval certificates	ETL
Plug type	120V-3 prong
Net weight (lbs)	44
Gross weight (lbs)	56
Required distance above range/rangetop/cooktop	30"/30"
Diameter of air duct (in) top	8
Operating mode	Ducted
Optional accessories	CHIMXHMC, RFPLT1000, RFPLT600
Number of lights	3
Type of lamps used	Halogen
Total power of the lamps (W)	60
Grease filter material	aluminium
Grease filter type	Multilayer cassette
Clean filter reminders	Electronic

COPYRIGHT 2013 BSH HOME APPLIANCES CORPORATION, ALL RIGHTS RESERVED