INNOVATION

- Largest (13") and most powerful (4600W) round heating element in its class
- Industry exclusive triple zone - accomodates multiple size pans with 3 diameter sizes

PERFORMANCE

- Speed Heating - Induction cooktops heat 50% faster than traditional gas cooktops
- Our Induction PowerBoost™ feature heats cookware faster than any other type of cooking technology.
- Auto Shut Off Timer available for all elements enables user to set desired cooking times. Separate kitchen timer also available.
- Keep Warm function allows meals to remain ready to serve
- Pan Recognition - Element will not turn on if other small objects are placed on the cooking zone
- Anti-Overflow System - exclusive feature shutting off the relevant element and sounding alarm when liquids are detected on user interface
- 2-step digital control panel indicates when elements are hot or very hot
- Child Safety Lock

DESIGN

- Frameless design
- Touch control panel with blue light illumination offers 17 power settings
- Angular, modern design coordinates with the suite of Thermador Masterpiece™ Collection appliances
- Trapezoid design control panel

COPYRIGHT 2016 BSH HOME APPLIANCES CORPORATION, ALL RIGHTS RESERVED

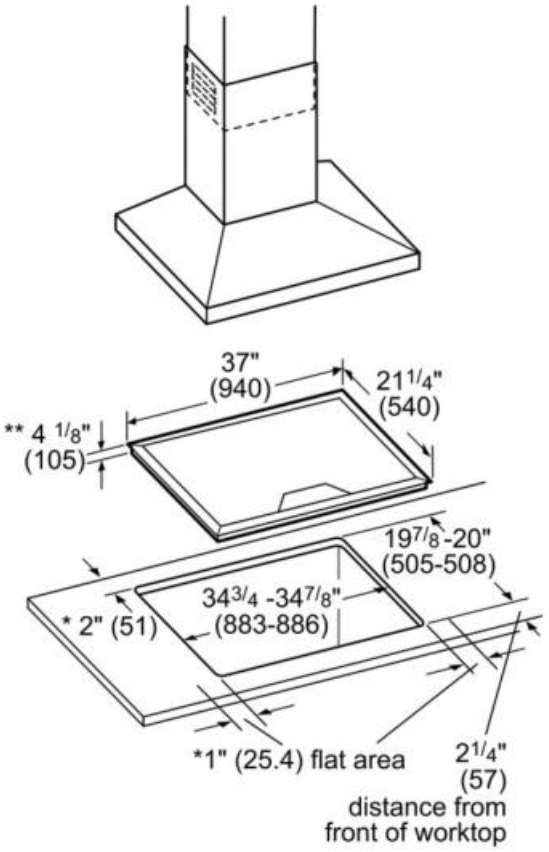

* Minimum distance from cutout to the wall
** Recessed depth
(includes 1" air clearance)

measurements in inches (mm in brackets)

Amps (A)	50
Frequency (Hz)	60; 50
Approval certificates	CSA
Plug type	no plug
Minimum distance from counter front (in)	2 1/2"
Minimum distance from rear wall (in)	2 3/8"
Net weight (lbs)	45
Optional accessories	CHEFSPAN13, SENSORPOT6, SENSORPOT7, SENSORPOTH
Sealed burners	No
Location of 1st heating element	front left
Location of 1st heating element	front left
Dimension of 1st heating element (in)	7"
Power of 1st heating element (W)	1.8
Power of 1st heating element (W)	1.8
Power of 1st heating element (kW in boost)	2.5
Location of 2nd heating element	back left
Dimension of 2nd heating element (in)	7"
Power of 2nd heating element (W)	1.8
Power of 2nd heating element (kW in boost)	2.5
Location of 3rd heating element	middle back
Dimension of 3rd heating element (in)	11", 13", 9"
Power of 3rd heating element (W)	2.2 ; 2.6 ; 3.3
Power of 3rd heating element (kW in boost)	3.4, 3.6, 3.3, 3.7
Location of 4th heating element	back right
Dimension of 4th heating element (in)	6"
Power of 4th heating element (W)	1.4
Power of 4th heating element (kW in boost)	1.8
Location of 5th heating element	front right
Dimension of 5th heating element (in)	9"
Power of 5th heating element (W)	2.2
Power of 5th heating element (kW in boost)	3.7

COPYRIGHT 2016 BSH HOME APPLIANCES CORPORATION, ALL RIGHTS RESERVED