INNOVATION

- Sensor Dome™ feature - a retractable sensor meaures the heat of the pot and keeps the temperature consistent
- CookSmart® feature - 9 pre-programmed cooking modes

Performance

- Triple element offers the capability to use multiple pan sizes
- Dual zone bridge element accomodates oblong pans and multiple diameter sizes
- Dual element offers the capability to use multiple pan sizes
- Auto Shut Off Timer enables the user to set desired cooking time
- Fast Preheat mode - accelerates the heating process - for quicker results
- Keep Warm function allows meals to remain ready to serve
- 2-level digital control panel indicates when elements are still hot

Design

- Touch control panel with blue light illumination offers 17 power settings
- Full stainless steel frame
- Trapezoid design control panel

COPYRIGHT 2014 BSH HOME APPLIANCES CORPORATION, ALL RIGHTS RESERVED

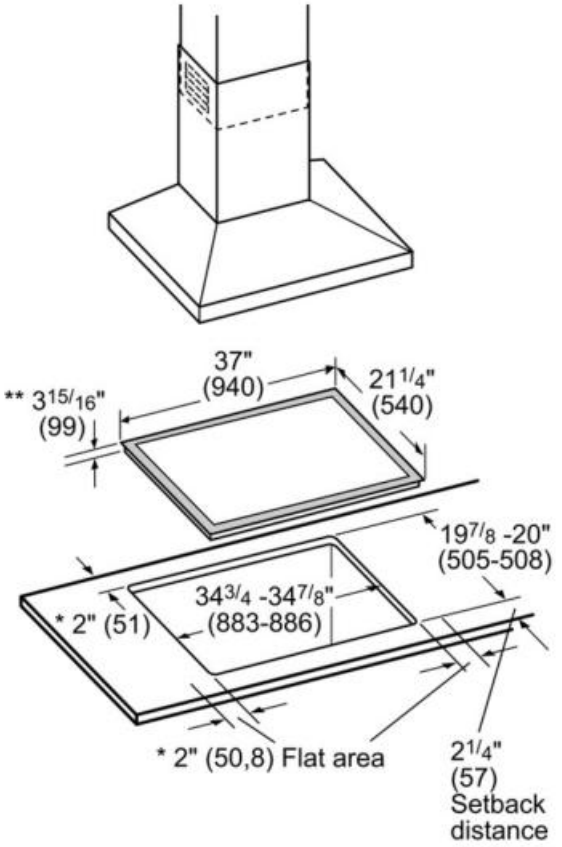

* Minimum distance from cutout to the wall
** Installed depth

Measurements in inches (mm in brackets)

Amps (A)	42
Frequency (Hz)	60
Approval certificates	CSA
Plug type	no plug
Minimum distance from counter front (in)	2 1/4"
Minimum distance from rear wall (in)	2 3/4"
Net weight (lbs)	33
Optional accessories	SENSORPOT6, SENSORPOT7, SENSORPOTH, SENSORSTRP
Sealed burners	No
Included accessories	1 x glass scraper, 1 x cookbook, 12 x Sensor strip
Location of 1st heating element	front left
Dimension of 1st heating element (in)	8"; 6"
Power of 1st heating element (W)	1 ; 2.2
Location of 2nd heating element	back left
Dimension of 2nd heating element (in)	6"
Power of 2nd heating element (W)	1.2
Location of 3rd heating element	middle back
Dimension of 3rd heating element (in)	7", 5", 9"
Power of 3rd heating element (W)	0.9 ; 1.6 ; 2.5
Location of 4th heating element	back right
Dimension of 4th heating element (in)	7"
Power of 4th heating element (W)	1.7
Location of 5th heating element	front right
Dimension of 5th heating element (in)	5", 7"
Power of 5th heating element (W)	0.7 ; 1.7

COPYRIGHT 2014 BSH HOME APPLIANCES CORPORATION, ALL RIGHTS RESERVED